BUTTERFLY VALVES

ALLVALVES ONLINE

Main Features:-

- High Performance Butterfly Valves
- Various Pressure Rating Options
- Can suit various Flanges PN10/16/25/#150/300
- 2" to 12" Wafer and Lugged Patterns
- Stainless and Carbon Steel Body Options

*Temperature and pressure determined by valve body, seat etc.

Suitable Applications & Approvals:

INDUSTRY HVAC WATER GAS OIL ATEX

SERIES: 20015-20022

MANUFACTURER: AVOL INDUSTRIAL VALVES

VALVE DIMENSIONS

SIZE	TYPE	A	B	H	ISO	Nm	SIZE	TYPE	A	B	H	ISO	Nm
2"	WAFER	117	81	70	F07x11	47	2"	LUGGED	117	81	70	F07x11	24
21/2"	WAFER	120	93	70	F07x11	60	21/2"	LUGGED	120	93	70	F07x11	34
3"	WAFER	129	101	70	F07x11	68	3"	LUGGED	129	101	70	F07x11	38
4"	WAFER	160	128	70	F07x14	81	4"	LUGGED	160	128	70	F07x14	45
5"	WAFER	170	159	90	F10x22	120	5"	LUGGED	170	159	90	F10x22	85
6"	WAFER	179	168	90	F10x22	210	6"	LUGGED	179	168	90	F10x22	130
8"	WAFER	218	207	90	F10	390	8"	LUGGED	218	207	90	F10	180
10"	WAFER	257	232	130	F12	580	10"	LUGGED	257	232	130	F12	330
12"	WAFER	300	270	130	F12	850	12"	LUGGED	300	270	130	F12	580

Note torque figures same for wafer and lugged **25 BAR** **10 BAR**

SERIES 20015	SERIES 20016	SERIES 20017	SERIES 20018	SERIES 20019	SERIES 20020	SERIES 20021	SERIES 20022
CS/RPTFE	CS / FIRE SAFE	SS / RPTFE	SS / FIRE SAFE	CS / RPTFE SEAT	CS / FIRE SAFE	SS / FIRE SAFE	SS / FIRE SAFE
WAFER	WAFER	WAFER	WAFER	LUGGED	LUGGED	LUGGED	LUGGED

DIMENSIONAL DRAWING OF VALVE

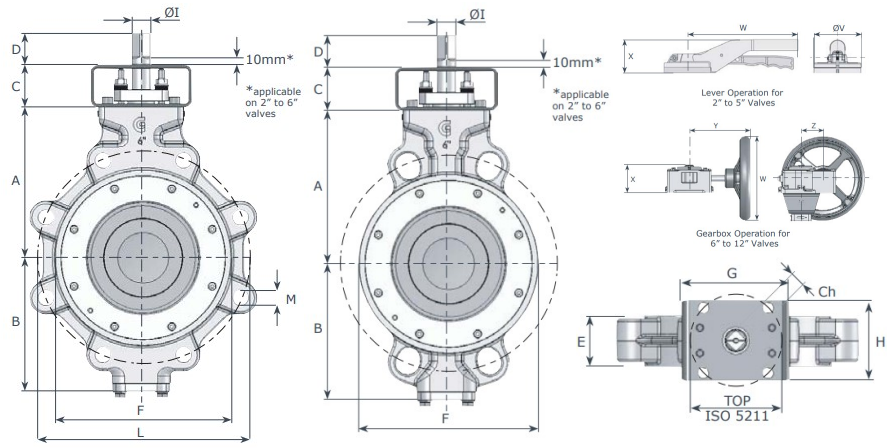

MATERIALS OF CONSTRUCTION

BODY	WCB or SS
DISC	OPTIONS
LINER	OPTIONS
BUSHING	OPTIONS
ORINGS	OPTIONS
PRESSURE	PN10/16/25/150-300
TEMP	-60 to +230C

T +44 (0)1386 552369
W www.allvalves.co.uk
E sales@allvalves.co.uk
F +44 (0)1386 554227